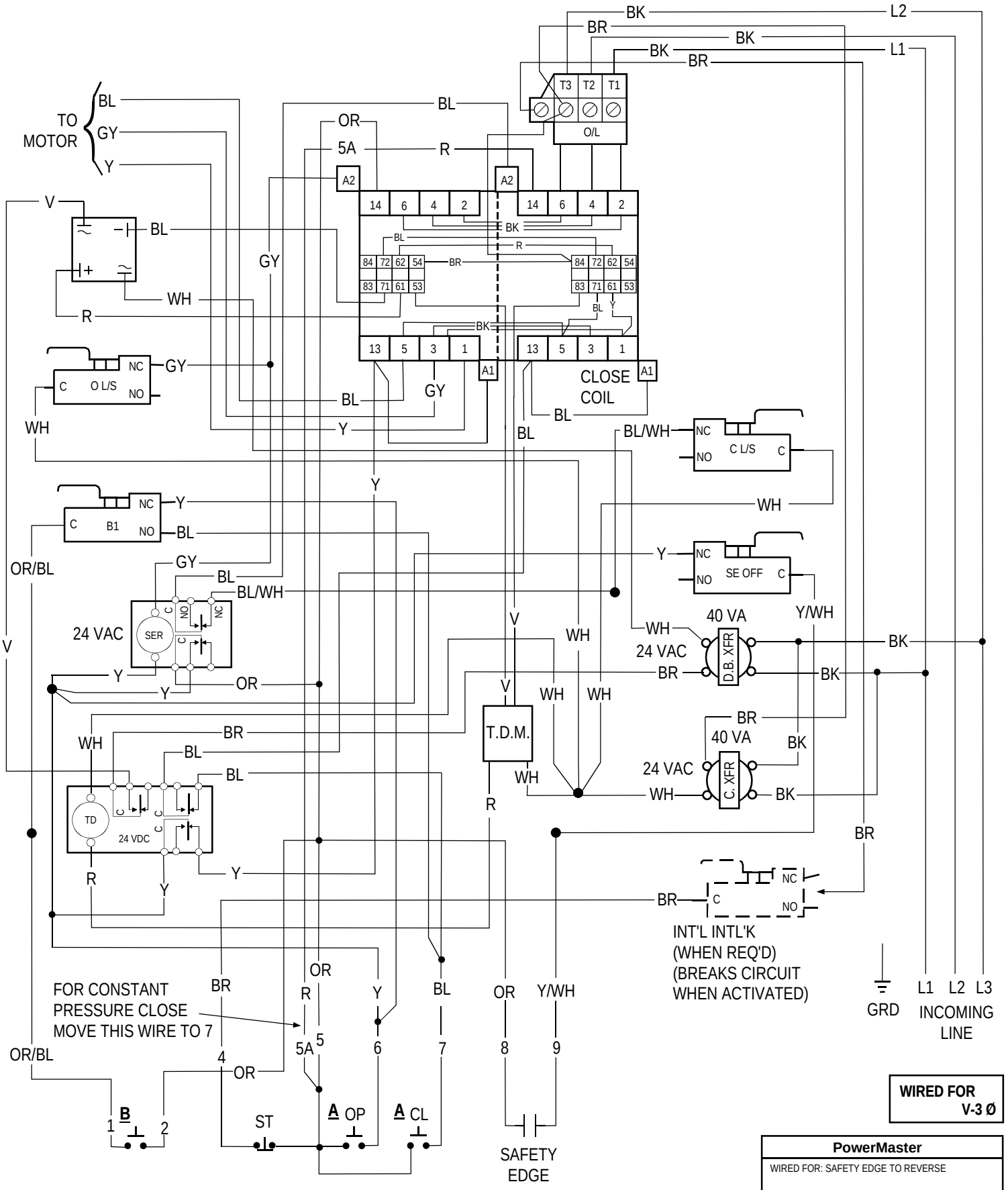

WIRED FOR V-3 Ø

PowerMaster	
WIRED FOR: SAFETY EDGE TO REVERSE	
DATE: 1-6-99	REV. 13
BY: F.S.	
SPECIAL: DYNAMIC BRAKING	
WIRING DIAGRAM NO.: EX- 33	

© Copyright PowerMaster 1997
No portion of this diagram may be reproduced without the expressed written permission of the manufacturer.

A TREADLES, PULL SWITCHES, KEY SWITCHES, WANDS, PHOTOELECTRIC DEVICES, ETC. MAY BE CONNECTED WHERE INDICATED.

B PULL SWITCHES AND SINGLE CONTACT CONTROL STATIONS MAY BE CONNECTED TO TERMINALS INDICATED.