MOTOR WIRING

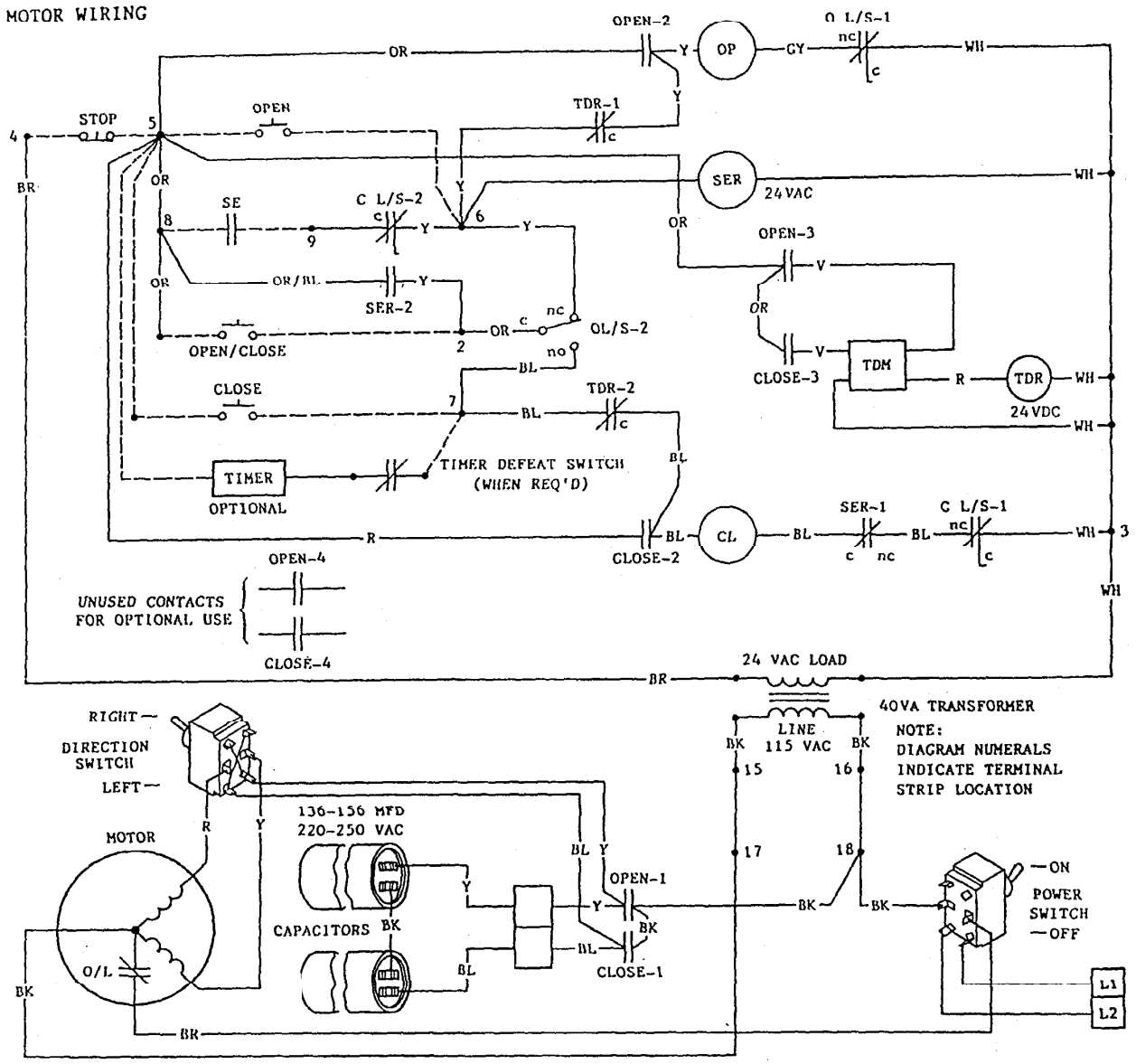

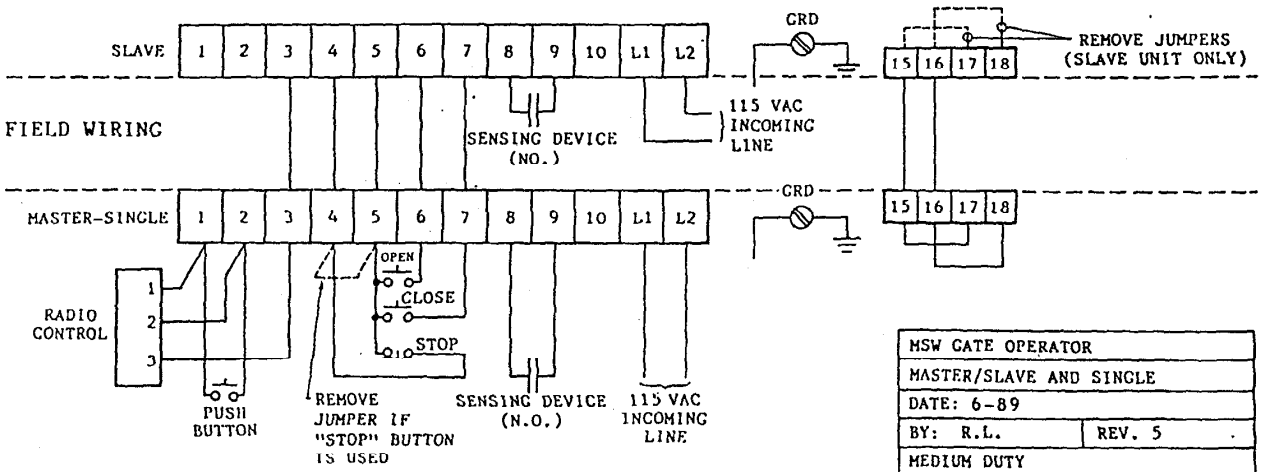

MSW GATE OPERATOR	
MASTER/SLAVE AND SINGLE	
DATE: 6-89	
BY: R.L.	REV. 5
MEDIUM DUTY SWING GATE OPERATOR	
115V 1Ø	
WIRING DIAGRAM	MS-31

NOTE: SEE INSTRUCTIONS FOR MASTER/SLAVE WIRING ON SEPERATE PAGE
OPTIONAL TIMER IN DASHED LINES

84-A WARNING: TURN OFF POWER BEFORE MAKING ADJUSTMENTS