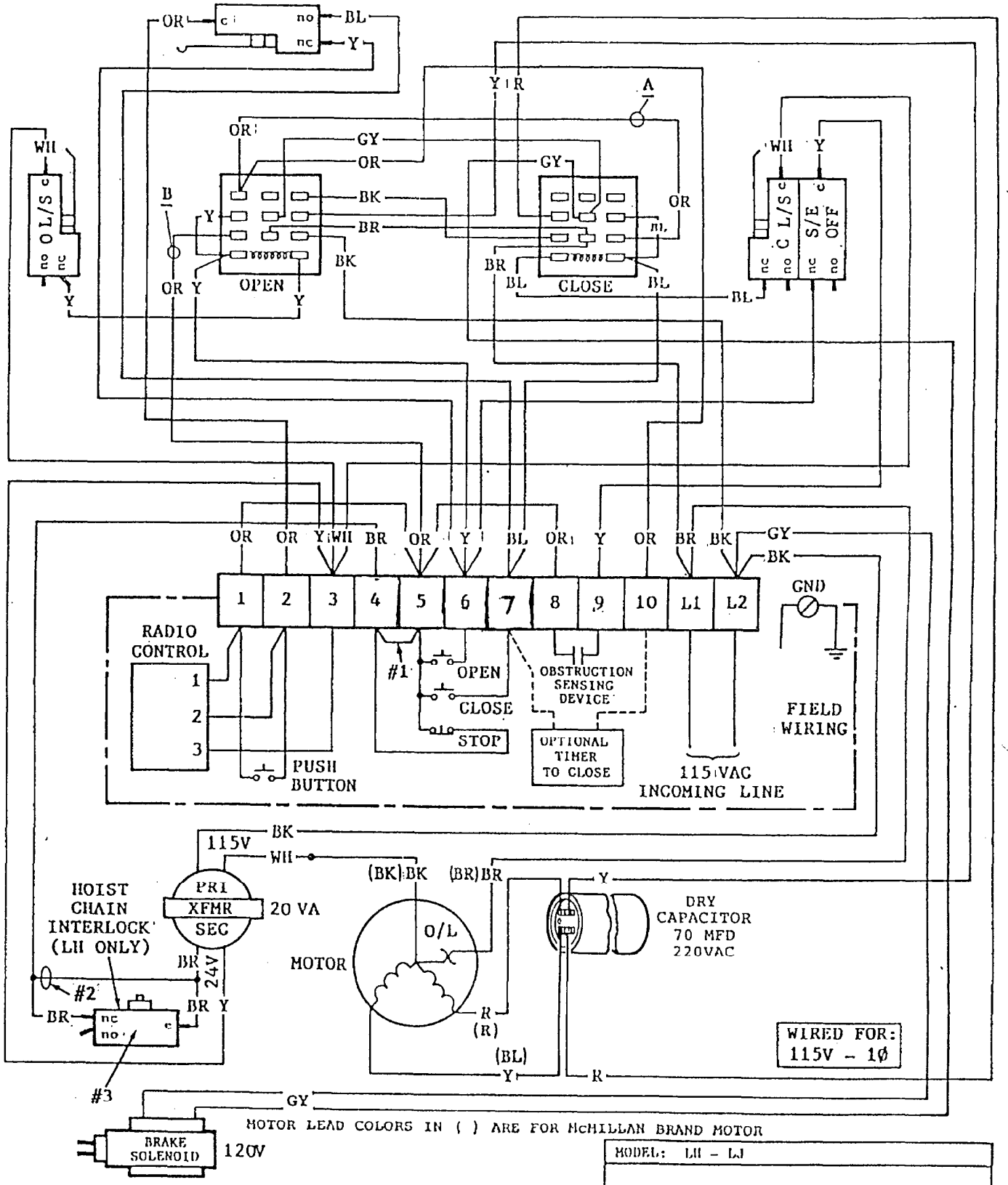

NOTES:

1 - INSTALL A JUMPER IF A STOP BUTTON IS NOT USED

2 - WIRE NOT USED ON LH

3 - SWITCH NOT USED ON LJ

A REMOVE THIS WIRE FOR CONSTANT PRESSURE ON CLOSE

B REMOVE THIS WIRE FOR CONSTANT PRESSURE ON OPEN AND CLOSE

MODEL: LH - LJ
DATE: 5-89 REV: 7
BY: R.L.
SPECIAL: WIRED TO ACCEPT RADIO CONTROL, ONE BUTTON STATION, KEYSWITCH, THREE BUTTON STATION AND
WIRING DIAGRAM LD-331 - (LH-LJ)