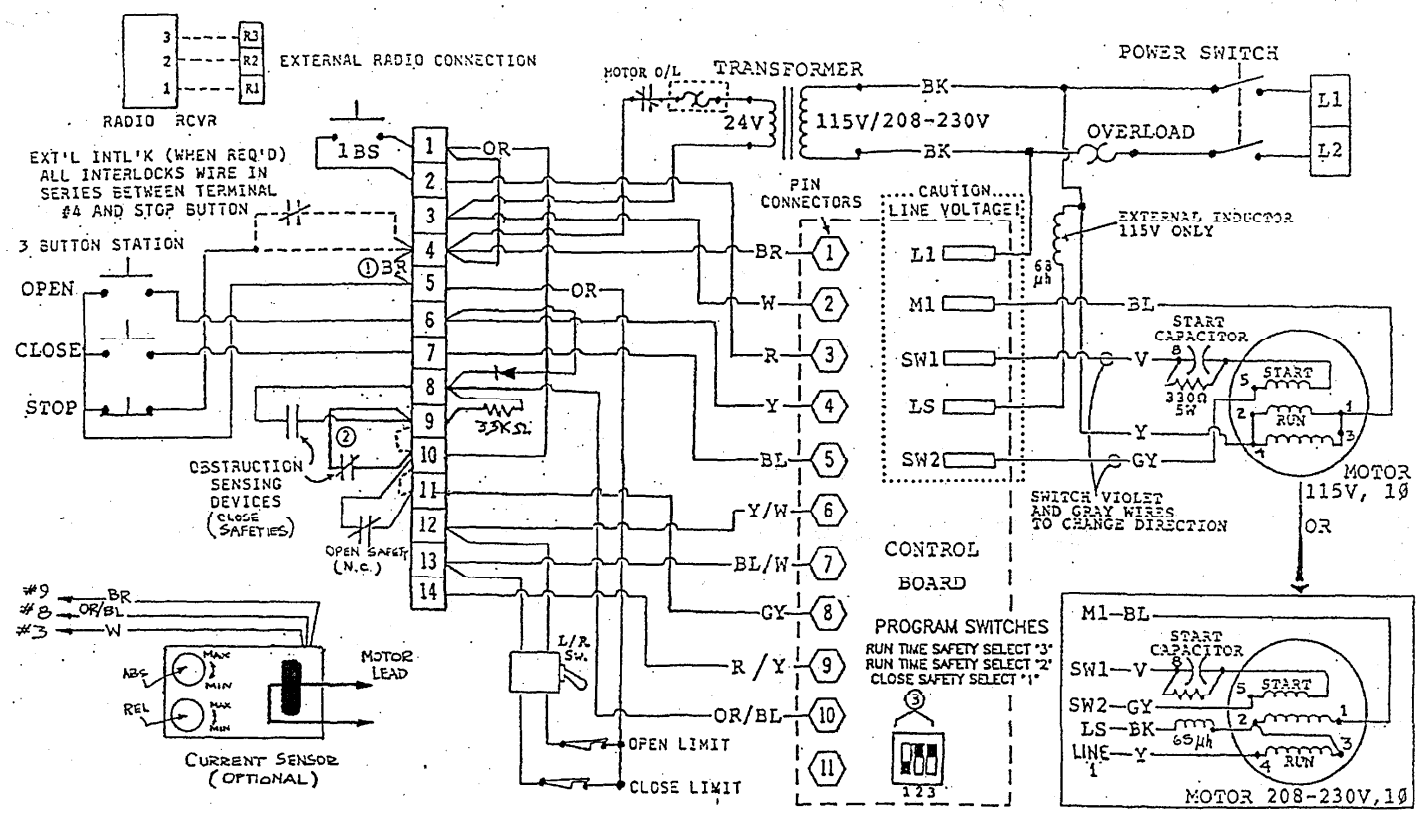

RUN TIME SAFETY SELECT:

28.8 SECONDS: SWITCHES 2 & 3 "ON".
45 SECONDS: SWITCH 2 "OFF", SWITCH 3 "ON".
60 SECONDS: SWITCHES 2 & 3 "OFF".
90.13 SECONDS: SWITCH 2 "ON", SWITCH 3 "OFF".

WIRED FOR: V- Ø

NOTE:

① WIRE IS NOT USED WHEN EXTERNAL INTERLOCK SWITCH OR STOP BUTTON IS USED.

② OBSTRUCTION SENSING DEVICES MAY BE N.O. TYPE (STANDARD AIR SWITCH, ELECTRIC EDGE, ETC.) OR N.C. "FAILSAFE" TYPE (PHOTOCELL, ETC.).

③ #1 DIPSWITCH MUST BE SET TO "OFF".

MODEL: SLIDE GATE OPERATOR	
W/FAL5582-SS4 CONTROL BOARD	
DATE: 1-94	REV: 5
BY: R.L.	Dr.by: J.D.
SPECIAL:	
WIRING DIAGRAM 5531-1/R	