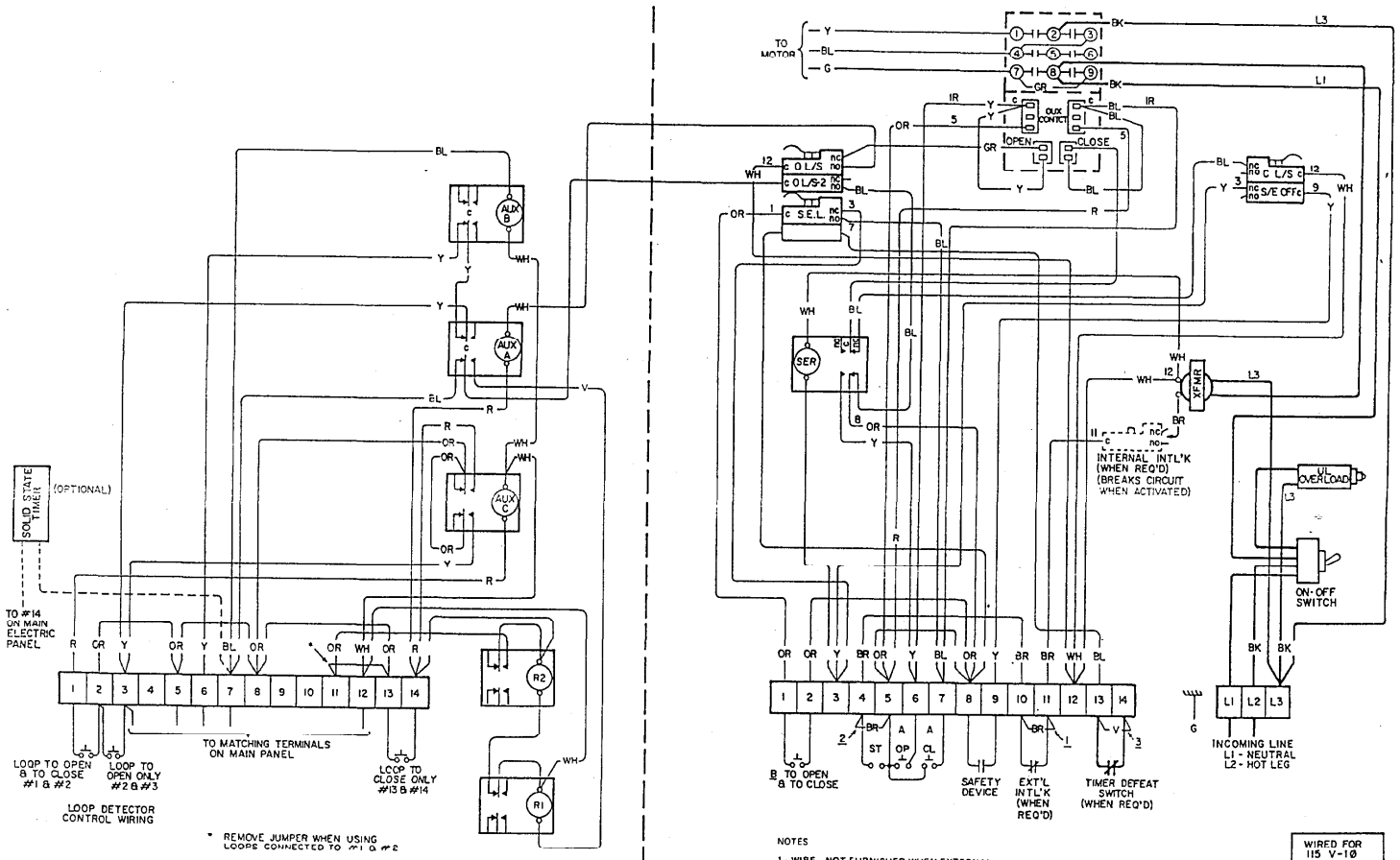

AUX ELECTRIC PANEL

MAIN ELECTRIC PANEL

NOTES

1 - WIRE - NOT FURNISHED WHEN EXTERNAL INTL'K SWITCH IS USED

2 - WIRE - REMOVE WIRE WHEN STOP BUTTON IS USED

3 - WIRE - NOT FURNISHED WHEN TIMER DEFEAT SWITCH IS USED

A - TREADLES, PULL SWITCHES, KEY SWITCHES, WANDS, PHOTO-ELECTRIC DEVICES, ETC. MAY BE CONNECTED TO TERMINALS INDICATED

B - REMOTE CONTROL UNITS (EXCLUDING TREADLES AND PHOTO-ELECTRIC UNITS), PULL SWITCHES AND SIGNAL CONTACT CONTROL STATIONS, MAY BE CONNECTED TO TERMINALS INDICATED.

WIRED FOR 115 V-1Ø

BARRIER GATE	
MODEL:	
DATE 2-7-83	REV: 5
BY R.L.	
SPECIAL: WIRED FOR LOOP DETECTORS	
WIRING DIAGRAM NO. B331-DSL	