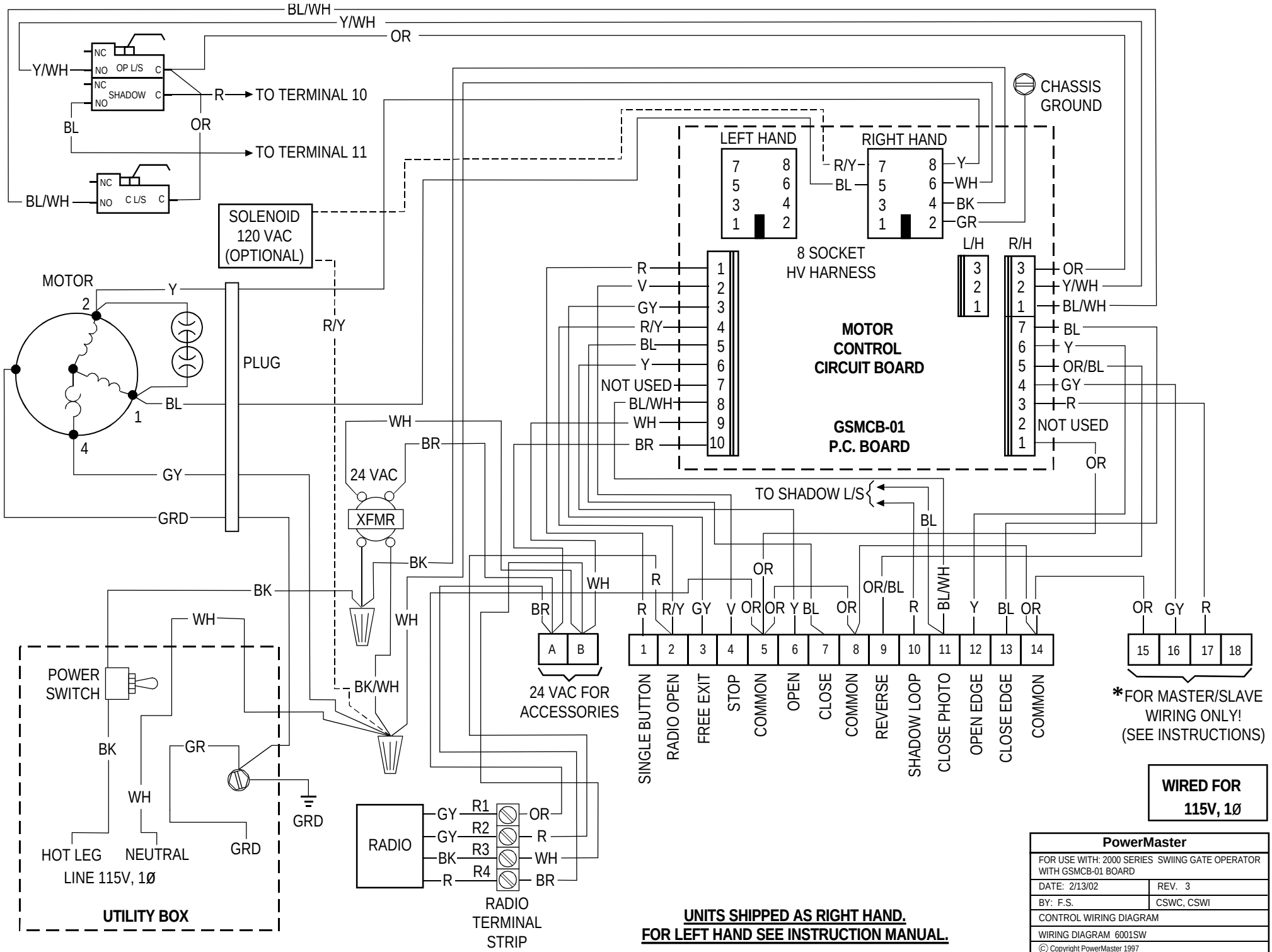
BL/WH
Y/WH
OR
NC
NO
OP L/S
C
SHADOW
R
TO TERMINAL 10
BL
OR
TO TERMINAL 11
C L/S
CHASSIS GROUND
LEFT HAND
RIGHT HAND
R/Y
BL
Y
WH
BK
GR
8 SOCKET HV HARNESS
L/H
R/H
SOLENOID 120 VAC (OPTIONAL)
MOTOR
PLUG
R/Y
R
V
GY
NOT USED
BL/WH
WH
BR
MOTOR CONTROL CIRCUIT BOARD
GSMCB-01 P.C. BOARD
OR/BL
24 VAC
XFMR
GRD
TO SHADOW L/S
BK
BK/WH
POWER SWITCH
HOT LEG
NEUTRAL
LINE 115V, 1Ø
UTILITY BOX
RADIO
R1
R2
R3
R4
RADIO TERMINAL STRIP
24 VAC FOR ACCESSORIES
SINGLE BUTTON
RADIO OPEN
FREE EXIT
STOP
COMMON
OPEN
CLOSE
COMMON
REVERSE
SHADOW LOOP
CLOSE PHOTO
OPEN EDGE
CLOSE EDGE
COMMON
*FOR MASTER/SLAVE WIRING ONLY! (SEE INSTRUCTIONS)
WIRED FOR 115V, 1Ø
UNITS SHIPPED AS RIGHT HAND.
FOR LEFT HAND SEE INSTRUCTION MANUAL.
PowerMaster
FOR USE WITH: 2000 SERIES SWIING GATE OPERATOR WITH GSMCB-01 BOARD
DATE: 2/13/02
REV. 3
BY: F.S.
CSWC, CSWI
CONTROL WIRING DIAGRAM
WIRING DIAGRAM 6001SW
© Copyright PowerMaster 1997
No portion of this diagram may be reproduced without the expressed written permission of the manufacturer.